KNIGHT OPTICAL

Component holders

Material / Specification: Self centering component holder
Part Code(s): HSC0200

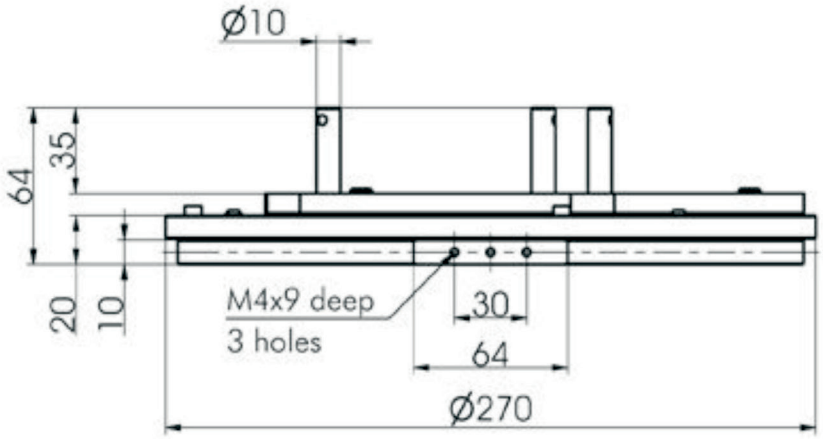

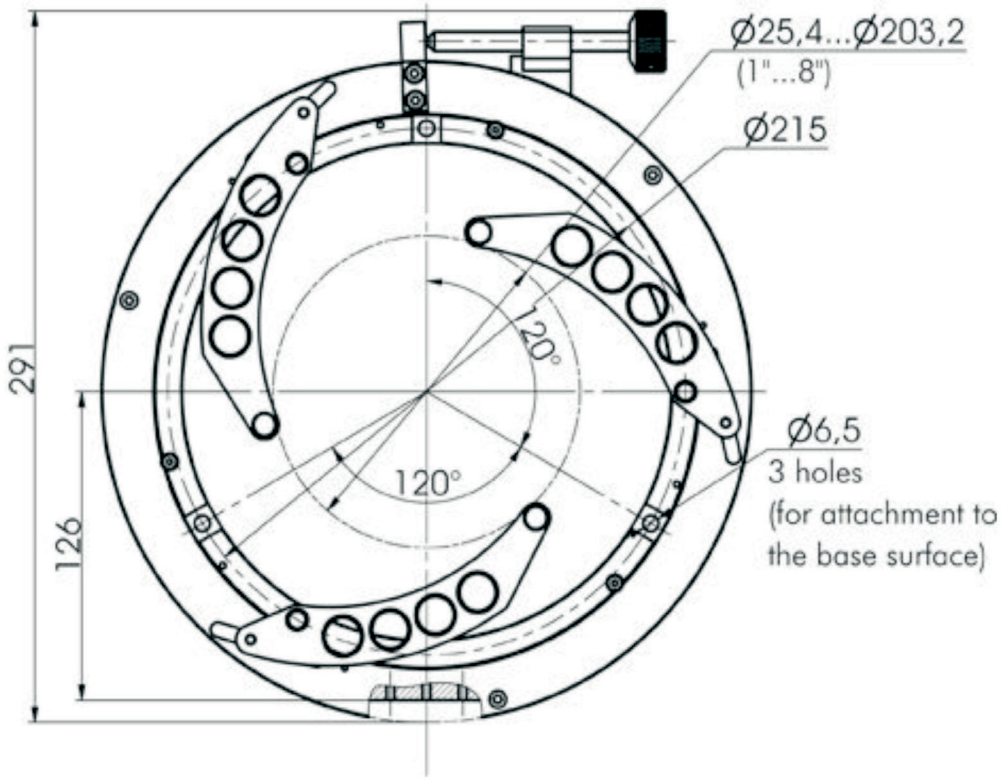

Knight Optical (UK) Limited © and Knight Optical USA LLC. Whilst every effort has been made to verify the information and data, Knight Optical can take no responsibility for its accuracy.
All content on this page is protected under the Copyright, Designs and Patents Act 1988 and the Copyright © is owned by Knight Optical (UK) Limited 2011-2015. All rights are reserved. Reproduction of any content, by any means, without the express permission of the owner is prohibited by law. The KNIGHT OPTICAL name and/or mark and KO KNIGHT OPTICAL LOGO are the trademarks of Knight Optical (UK) Limited. Knight Optical (UK) Ltd is an ISO registered company.